Cambridge Assessment International Education

Cambridge IGCSE™

CANDIDATE NAME	

CENTRE NUMBER						CANDIDATE NUMBER				

2539313860

DESIGN & TECHNOLOGY **0445/42**

Paper 4 Systems & Control **May/June 2020**

1 hour

You must answer on the question paper.

No additional materials are needed.

INSTRUCTIONS

- Section A: answer **all** questions.
- Section B: answer **one** question.
- Use a black or dark blue pen. You may use an HB pencil for any diagrams or graphs.
- Write your name, centre number and candidate number in the boxes at the top of the page.
- Answer in the space provided.
- Do **not** use an erasable pen or correction fluid.
- Do **not** write on any bar codes.
- You may use a calculator.

INFORMATION

- The total mark for this paper is 50.
- The number of marks for each question or part question is shown in brackets [ ].
- All dimensions are in millimetres.

This document has **20** pages. Blank pages are indicated.

DC (JC/CT) 185155
© UCLES 2020

Section A

Answer **all** questions in this section.

1 Give **two** advantages of using plastics rather than wood for making window and door frames.

1 .....

.....

2 .....

.....
[2]

2 Fig. 2.1 shows a wooden door frame before it is positioned in a building.

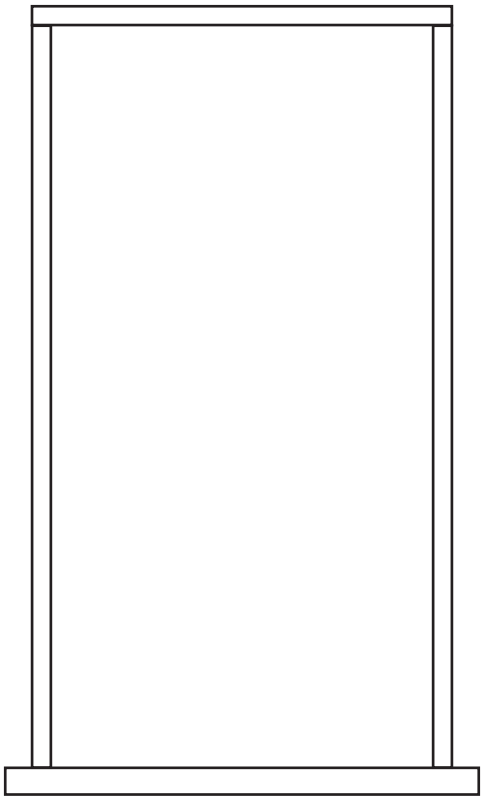

Fig. 2.1

Draw on Fig. 2.1 to show how triangulation can be used to prevent the frame from being distorted while it is being installed in the building.
Give details of any joining methods used. [3]

3 Fig. 3.1 shows a gate latch.

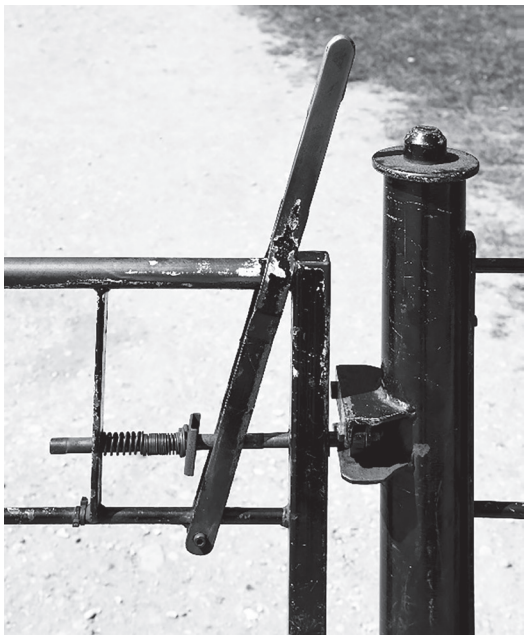

Fig. 3.1

(a) State the order of lever used in the latch.

..... [1]

(b) Draw a different example of where the order of lever shown in Fig. 3.1 is used.

[2]

4 **(a)** Give **two** reasons why spur gears are used to connect two shafts together.

1 .....

.....

2 .....

.....
[2]

(b) Fig. 4.1 shows a motor shaft and driven shaft which will be connected using spur gears. The direction of rotation of the motor shaft and driven shaft are shown.

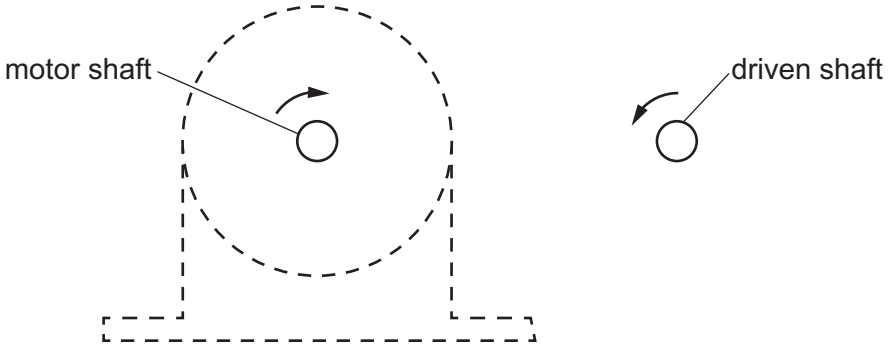

Fig. 4.1

Add the outline shape of spur gears that would reduce the speed of the driven shaft and produce the direction of rotation shown. [3]

5 State the meaning of 'torsion' in a shaft.

.....

..... [1]

6 Complete Table 6.1 to identify the materials as conductors or insulators.
The first one has been completed.

Table 6.1

Material	Conductor	Insulator
Tin	✓	
Mercury		
Polyvinyl Chloride (PVC)		
Epoxy resin		
Aluminium		

[4]

7 Fig. 7.1 shows two switches.

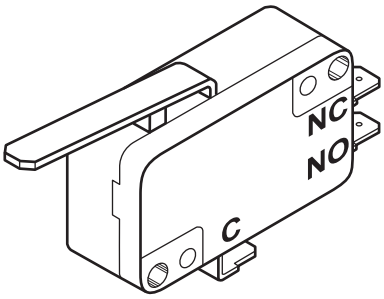

Microswitch

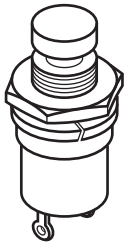

PTM switch

Fig. 7.1

(a) Give **one** practical use for each switch.

Microswitch .....

PTM switch .....
[2]

(b) State the difference between a PTM switch and a PTB switch.

.....

..... [1]

8 Give **two** ways that aesthetics can play a part in the design of electronic devices.

1 .....

.....

2 .....

.....
[2]

9 Fig. 9.1 shows an outline block diagram of a control system.

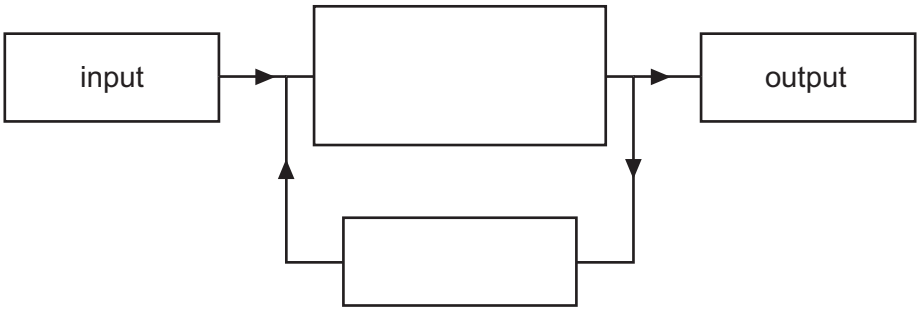

Fig. 9.1

Add labels to complete Fig. 9.1. [2]

Section B

Answer **one** question from this section.

10 **(a)** Beams made from a single piece of wood are limited in length to the size of the tree that they are cut from.

(i) Use sketches and notes to show how the length of a wooden beam can be increased by laminating.

[3]

(ii) Give **one** reason why laminated beams are often used in large public buildings.

.....

.....

..... [1]

(b) Fig. 10.1 shows a child's rocking toy.

Fig. 10.1

(i) Name the type of structure that has been used for the toy.

..... [1]

(ii) Explain how the shape of the toy adds strength to the structure.

.....

.....

.....

..... [2]

(c) Fig. 10.2 shows a single span suspension bridge crossing a river estuary.

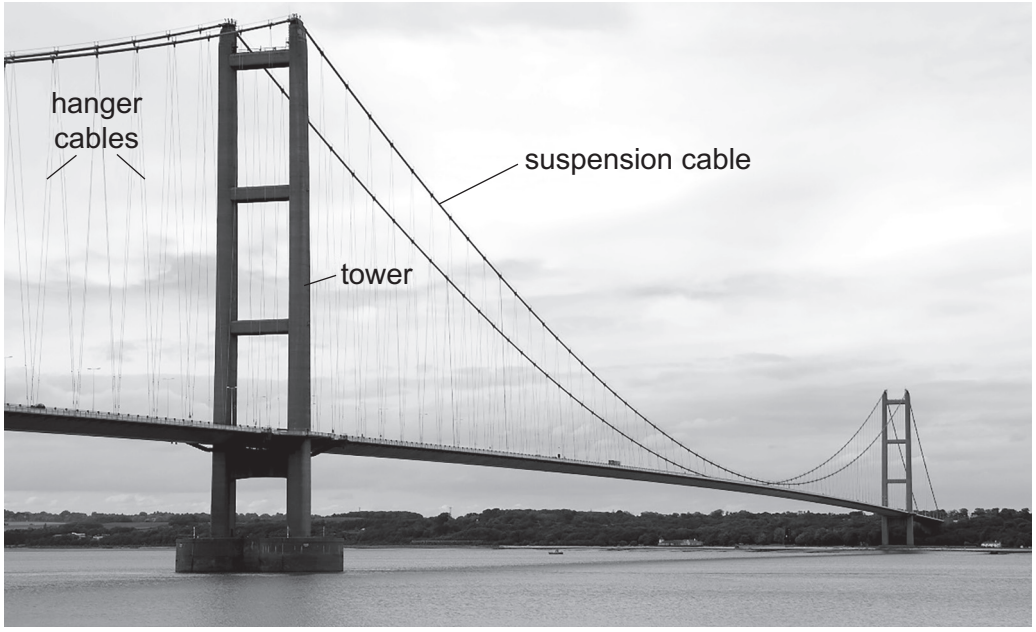

Fig. 10.2

(i) Give **one** benefit of designing the bridge with a single span.

.....

..... [1]

(ii) Give **two** stationary loads and **two** moving loads that the bridge will have to withstand.

Stationary loads

1 .....

2 .....

Moving loads

1 .....

2 .....

[4]

(iii) The bridge deck is a welded steel hollow box section.
Use sketches and notes to show **one** other method of joining steel sheet together.

[2]

(iv) Fig. 10.3 shows a section through the bridge deck with the positions of two loads shown.

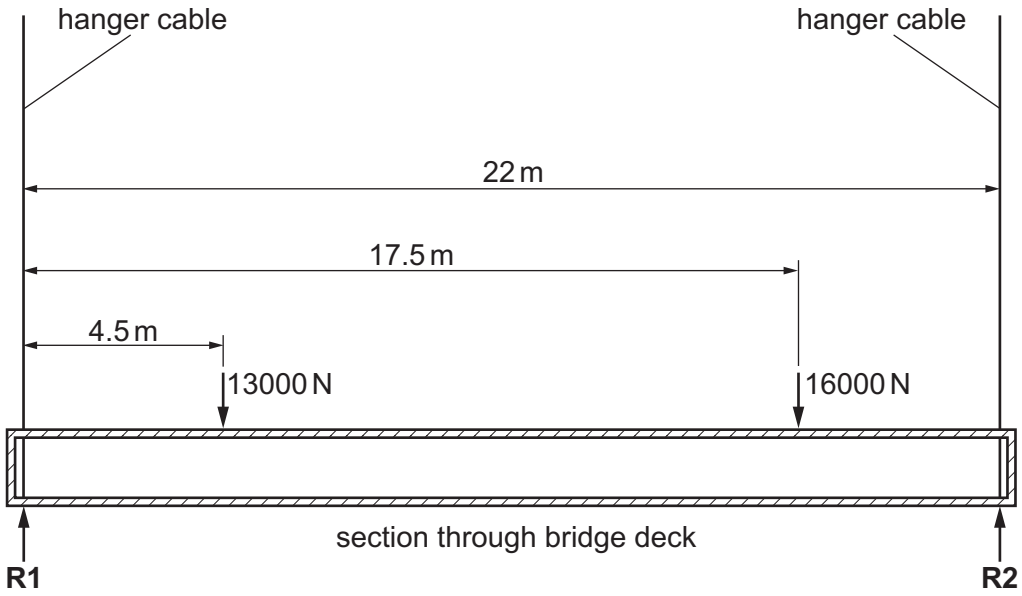

Fig. 10.3

Calculate the reactions at **R1** and **R2**.

.....

.....

.....

.....

..... [4]

(v) The towers in the bridge are made from reinforced concrete.
Explain why reinforced concrete has been used.

.....

.....

.....

..... [2]

(vi) The suspension cables use a large number of Ø5 mm steel wires spun or twisted together to give a Ø680 mm cable as shown in Fig. 10.4.

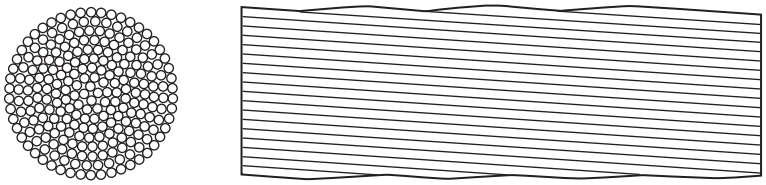

Fig. 10.4

Explain why each suspension cable is made from spun steel wires.

.....

.....

.....

..... [2]

(vii) The stress in each Ø5 mm wire is 1500 N / mm^2.
Calculate the force acting on each wire.

Use the formula: $\text{stress} = \dfrac{\text{force}}{\text{cross sectional area}}$

.....

.....

..... [3]

11 **(a)** Fig. 11.1 shows two uses for bevel gears.

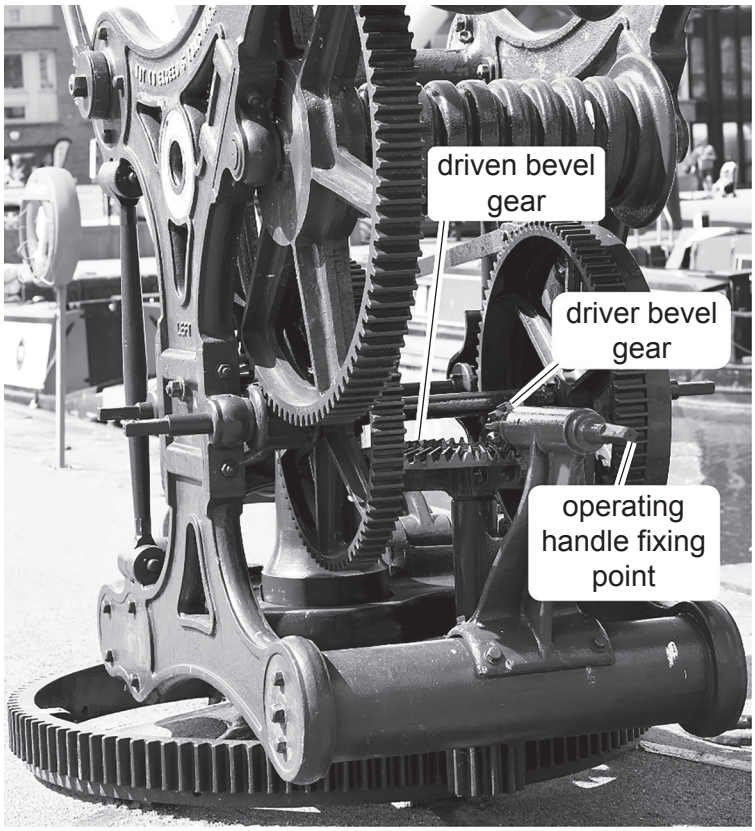

Dockyard crane

Hand drill

Fig. 11.1

(i) Use the terms below to complete the description of what is happening in the two examples in Fig. 11.1.

90º	**45º**	**slower**	**decrease**
faster	**increase**	**180º**	**remain the same**

The driven gear in the hand drill will rotate ..... than the driving gear and the torque will ..... .

The driven gear in the crane will rotate ..... than the driving gear and the torque will ..... . In both cases the drive will have moved through ..... . [5]

(ii) Calculate the rotational speed of the handle on the hand drill if the chuck rotates at 475 rpm.

.....

.....

.....

..... [3]

(iii) In both examples in Fig. 11.1 the operational conditions could affect the working life of the gears.
Describe what could be done to overcome this problem.

.....

.....

.....

..... [2]

(b) Fig. 11.2 shows a cam profile and follower.

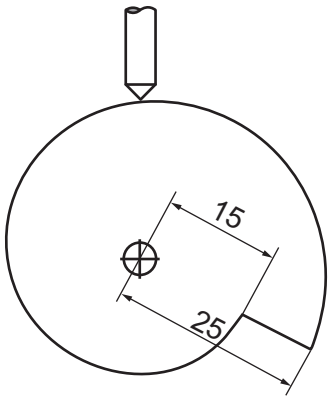

Fig. 11.2

(i) State the conversion of motion that results from using a cam.

..... to ..... [2]

(ii) Mark the direction of rotation of the cam on Fig. 11.2. [1]

(iii) Give the vertical distance that the follower is lifted in each revolution of the cam in Fig. 11.2.

..... [1]

(iv) Use sketches and notes to show the profile of a cam that will lift a follower twice for each revolution and will have no dwell.

[2]

(c) Fig. 11.3 shows a heavy packing crate.

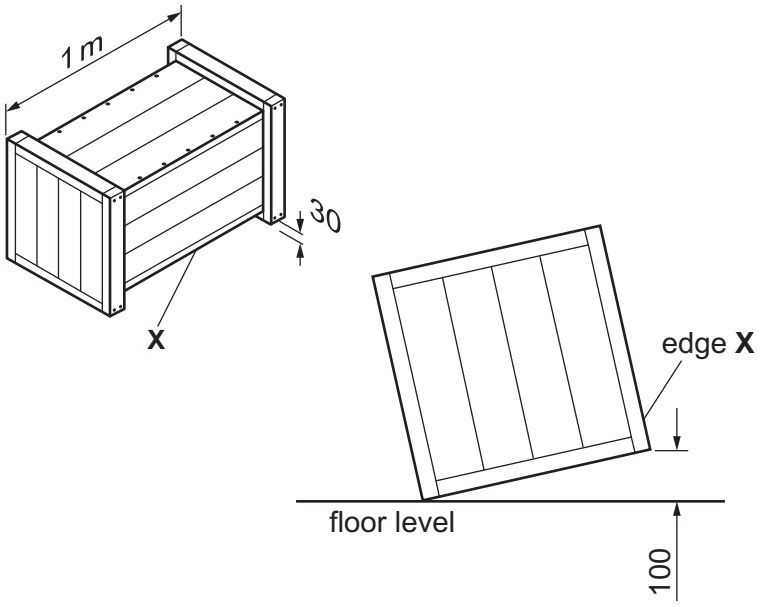

Fig. 11.3

Edge **X** of the packing crate needs to be lifted by 100 mm to the position shown.
Draw a design on Fig. 11.3 for a lever system that will allow the edge to be lifted by 100 mm.

[3]

(d) Fig. 11.4 shows details of a screw thread that is used in a woodworking vice.

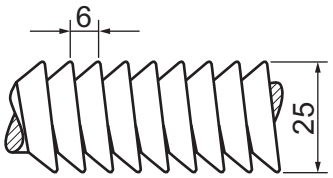

Fig. 11.4

(i) Calculate the mechanical advantage of the screw thread.

Use the formula: $MA = \frac{\text{circumference}}{\text{pitch}}$

.....

.....

..... [2]

(ii) The end of the woodworking vice handle applies a load 16 times greater than the effort. Calculate the maximum force applied by the screw thread for an effort of 20 N at the end of the handle.

.....

..... [2]

(iii) Explain why the actual load applied by the screw thread will be reduced.

.....

.....

..... [2]

12 **(a)** Fig. 12.1 shows part of the circuit for an LED night light.

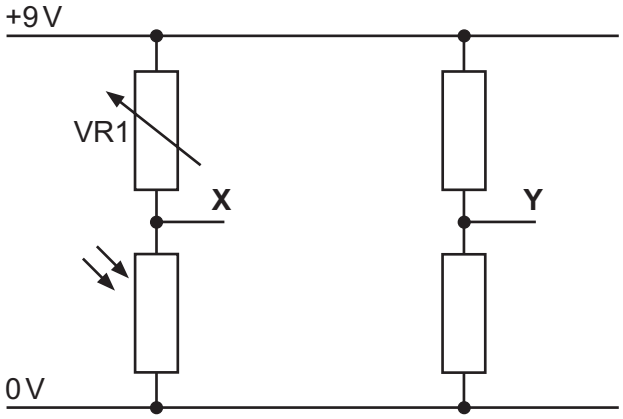

Fig. 12.1

(i) The LDR (light dependent resistor) is combined with component VR1 to provide a voltage at point **X**.
Sketch a graph to show how the LDR resistance changes when the light level falls.

[2]

(ii) State how the voltage at **X** can be adjusted with no change in the light level.

.....

.....

..... [1]

(iii) Calculate the voltage at point **X** in Fig. 12.1 when the resistance in VR1 is 110 kΩ and the LDR resistance is 243 kΩ.

Use the formula: $V_{out} = \frac{R2}{R1 + R2} \times V_{in}$

.....

.....

.....

..... [3]

(iv) The voltage at **Y** in Fig. 12.1 has been calculated to be 6.9 V.
When the circuit is tested with real components in a breadboard the voltage **Y** is measured as 6.7 V.
Give **two** possible reasons for the calculated and actual values being different.

1 .....

.....

2 .....

.....
[2]

(v) An operational amplifier (OP AMP) will be used to compare the voltages at **X** and **Y** and provide an output that will switch on the LED.
Fig. 12.2 shows the complete circuit.

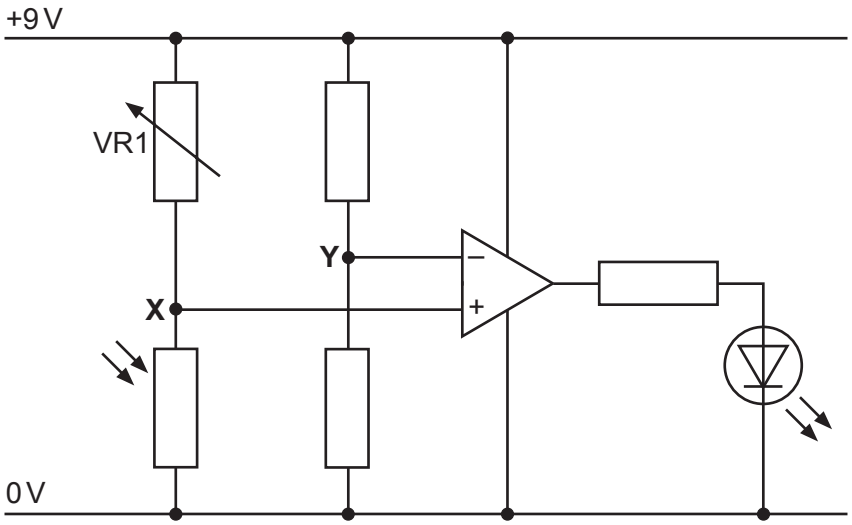

Fig. 12.2

Explain how the circuit works.

.....

.....

.....

.....

..... [3]

(b) A burglar alarm in a house uses reed switch sensors on the doors.
Fig. 12.3 shows how one of the reed switch sensors is connected.

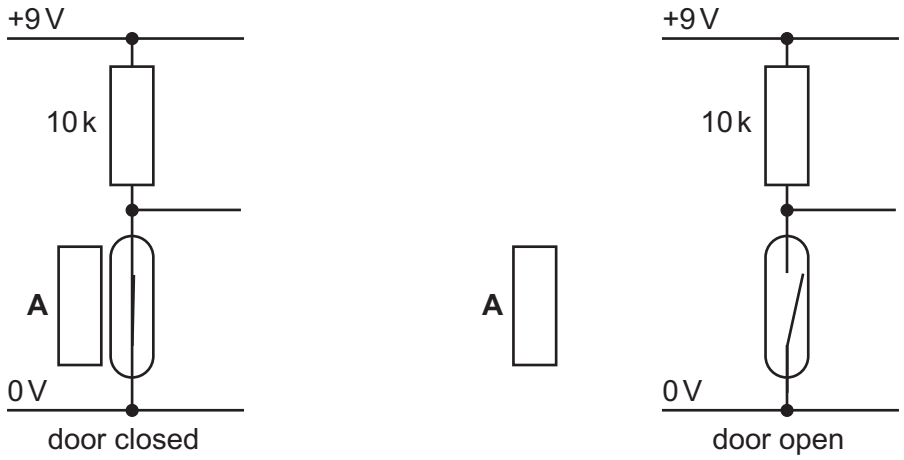

Fig. 12.3

(i) Name component **A** and describe how the reed switch sensor operates.

.....

.....

.....

..... [3]

(ii) Draw **three** logic gates connected to provide a single output signal when one or more of four sensors have been activated.

[2]

(iii) Fig. 12.4 shows the transistor circuit that will amplify the signal from the logic gates to operate a DPDT relay.

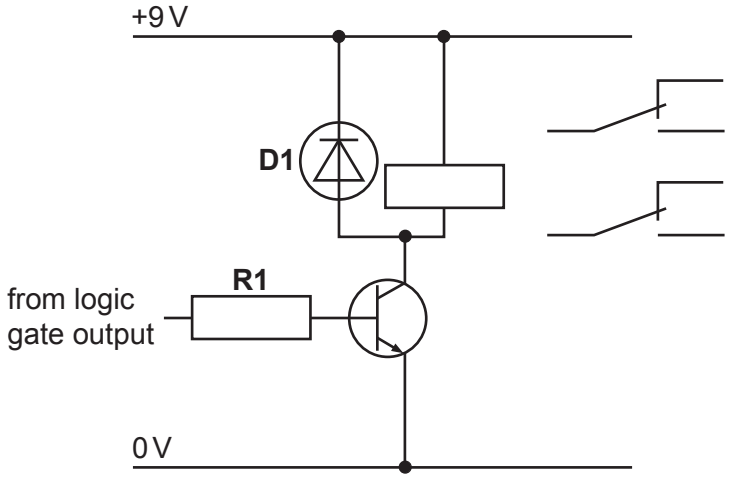

Fig. 12.4

Describe the purpose of **R1** and **D1** in the circuit.

.....

.....

.....

..... [2]

(iv) Fig. 12.5 shows the connections used to latch the output of the alarm on when the sensor is no longer activated.

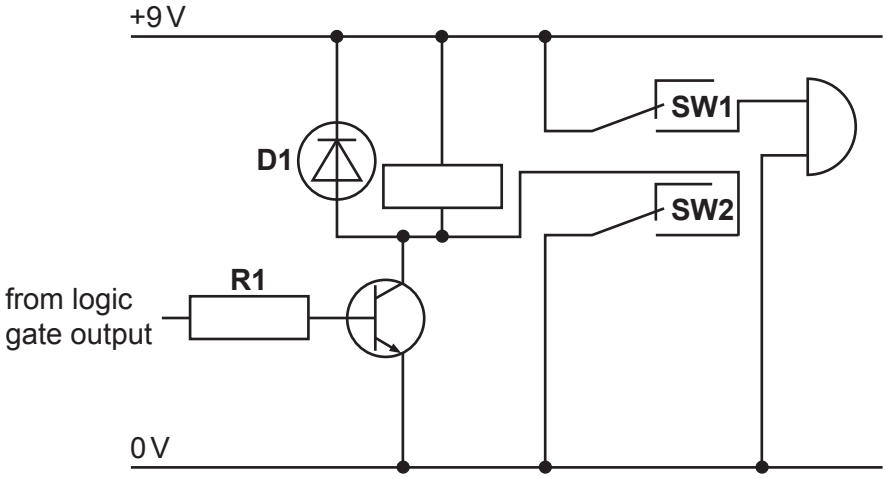

Fig. 12.5

Explain how the latch circuit in Fig. 12.5 works.

.....

.....

.....

.....

..... [3]

(v) The alarm can only be switched off by using a reset switch.
Circle a suitable position for a reset switch on Fig. 12.5. [1]

(vi) To automatically operate the reset after 20 minutes a time delay circuit could be used.
Name **two** components that can be used together to provide a time delay.

1 .....

2 .....
[2]

(vii) Name an integrated circuit (IC) that could be used to provide an accurate delay without using the components from **part (vi)**.

..... [1]

BLANK PAGE

Permission to reproduce items where third-party owned material protected by copyright is included has been sought and cleared where possible. Every reasonable effort has been made by the publisher (UCLES) to trace copyright holders, but if any items requiring clearance have unwittingly been included, the publisher will be pleased to make amends at the earliest possible opportunity.

To avoid the issue of disclosure of answer-related information to candidates, all copyright acknowledgements are reproduced online in the Cambridge Assessment International Education Copyright Acknowledgements Booklet. This is produced for each series of examinations and is freely available to download at www.cambridgeinternational.org after the live examination series.

Cambridge Assessment International Education is part of the Cambridge Assessment Group. Cambridge Assessment is the brand name of the University of Cambridge Local Examinations Syndicate (UCLES), which itself is a department of the University of Cambridge.

© UCLES 2020